Contimac CM 1905/11/500 D SDS (3-400V)

Contimac – leveranciercode 26860 – bronblad 1

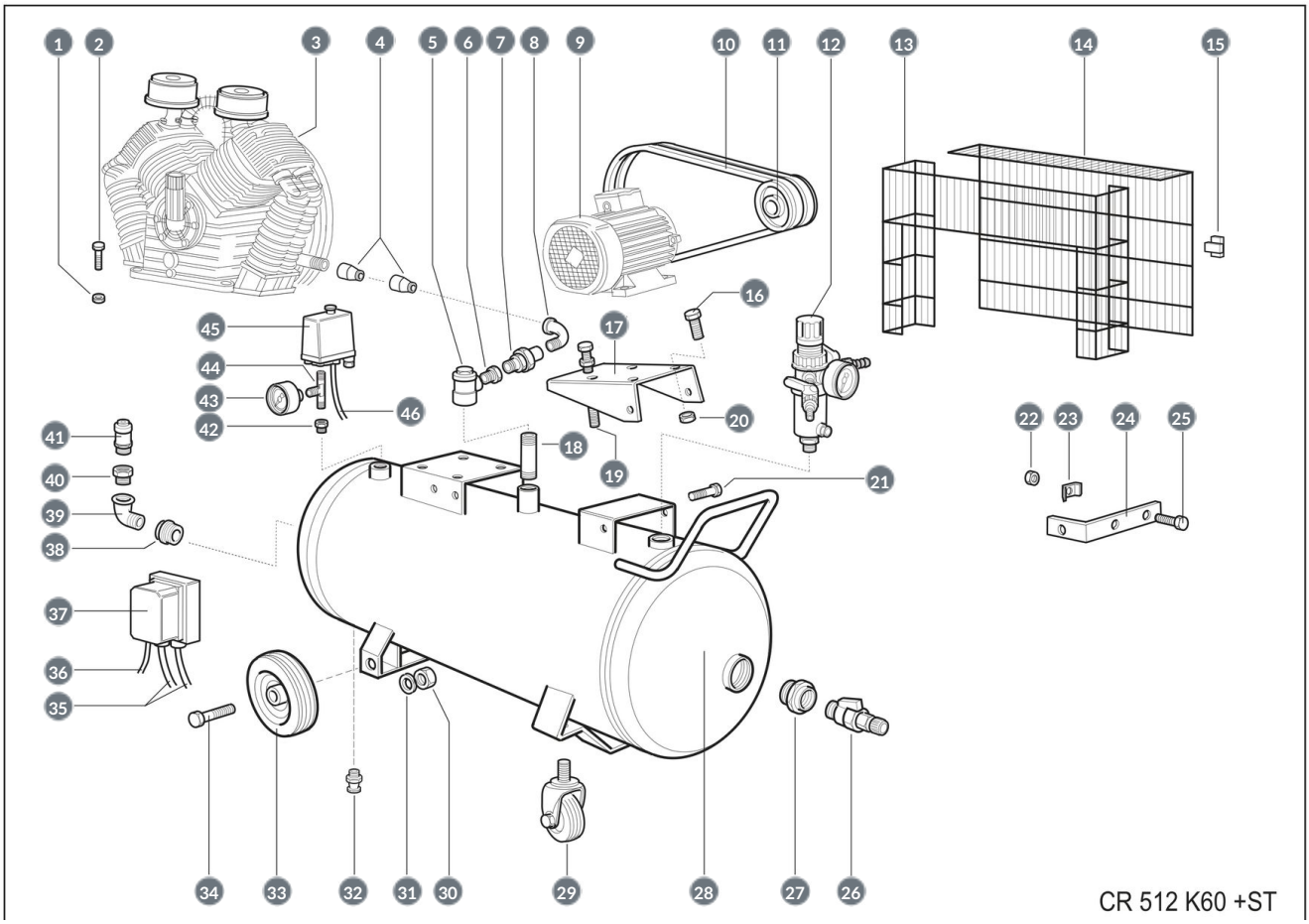

#	Code	Description	Price
1	0640111	Dado Nut	—
2	0031251	Vite Screw	—
3	7370013	Testata Head	—
4	3138045	Raccordo Junction	—
5	7301424	Valvola di ritegno Non return valve	—
6	3150851	Riduzione Reduction	—
7	3135445	Bocchettone Connection	—

#	Code	Description	Price
8	3131105	Curva Curve	—
9	7205815	Motore Trifase Motor Three Phase	—
10	1670907	Cinghia Belt	—
11	1633103	Puleggia Pulley	—
12	7301319	Riduttore Pressure reducer	—
13	7301396	Copricinghia posteriore Rear Beltguard	—
14	7301395	Copricinghia anteriore Front Beltguard	—
15	7301326	Tassello Cap	—
16	0031231	Vite Screw	—
17	7308076	Supporto Motore Motor support	—
18	7301602	Nipples Nipples	—
19	7301337	Tendicinghia Belt pulling	—
20	0640111	Dado Nut	—
21	0031211	Vite Screw	—
22	0640051	Dado Nut	—
23	7301168	Piastrina fissaggio Fixing plate	—
24	7301576	Supporto copricinghia Beltguard support	—
25	0030481	Vite Screw	—
26	7301570	Rubinetto Cock	—
27	3150880	Riduzione Connection	—
28	7308581	Serbatoio Tank	—
29	7301199	Ruota girevole Wheel	—
30	0650231	Dado Nut	—
31	0780181	Rondella Washer	—
32	7302003	Rubinetto spurgo Drain cock	—
33	7301200	Ruota fissa Wheel	—
34	0012731	Vite Screw	—
35	4322063	Cavo Cable	—

#	Code	Description	Price
36	4322021	Cavo Cable	—
37	7301513	Quadro elettrico Control box	—
38	3150880	Riduzione Connection	—
39	3131085	Curva Connection M	—
40	3140061	Riduzione Connection	—
41	7301948	Valvola di sicurezza Safety valve	—
42	3140030	Riduzione Connection	—
43	7301614	Manometro Pressure Gauge	—
44	7301158	Raccordo Connection	—
45	7301583	Pressostato Pressure switch	—
46	4711302	Tubo rilsan Hose rilsan	—